SLP110-12U

High Efficiency Multicrystalline PV Module

Electrical Characteristics	SLP110-12U
Product code	110011201
Maximum power (Pmax)	110W
Voltage at Pmax (Vmp)	17.2V
Current at Pmax (Imp)	6.40A
Open-circuit voltage (Voc)	21.6V
Short-circuit current (Isc)	7.08A
Temperature coefficient of Voc	-(80±10)mV/° C
Temperature coefficient of Isc	(0.065±0.015)%/ ° C
Temperature coefficient of power	-(0.5±0.05)%/ ° C
NOCT (Air 20° C; Sun 0.8kW/㎡ wind 1m/s)	47±2° C
Operating temperature	-40° C to 85° C
Maximum system voltage	1000V DC
Power tolerance	+10%/- 5%

*STC: Irradiance 1000W/㎡, AM1.5 spectrum, module temperature 25° C
*NOCT:Nominal operating cell temperature (the data is only for reference)

Module Diagram

Dimensions in brackets are in inches.

Un-bracketed dimensions are in millimeters.

Unit: mm[in.]

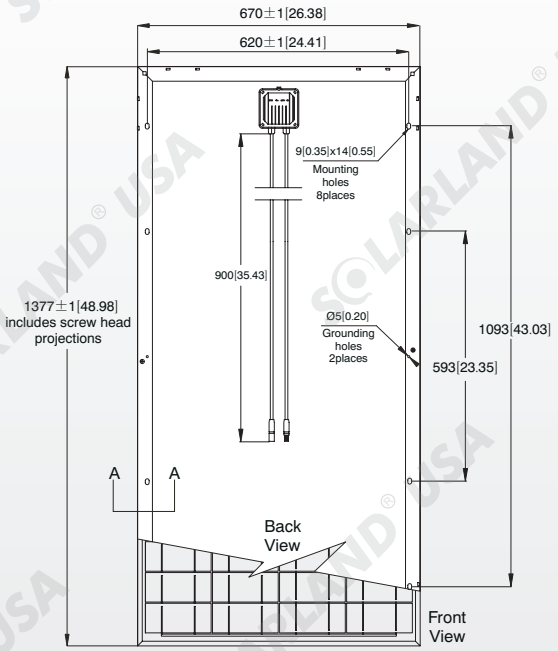

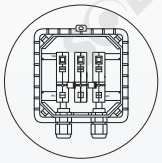

Junction Box
Top View(Lid Open)

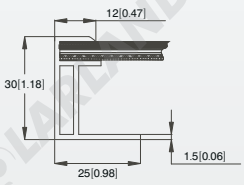

Section A-A

Features

- Nominal 12V DC for standard output.
- Outstanding low-light performance.
- Heavy-duty anodized frames.
- High transparent low-iron,tempered glass.
- Rugged design to withstand high wind pressure, hail and snow load.
- Aesthetic appearance.

Characteristics

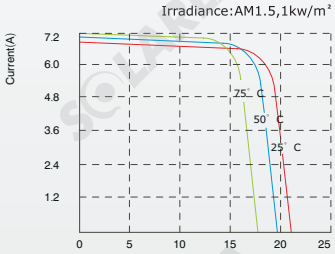

SLP110-12U I-V Curves

Specifications	SLP110-12U
Cells	Multicrystalline silicon solar cell
No. of cells and connections	72(4X18)
Module dimension	1377mm[54.21in.]x670mm[26.38in.]x30mm[1.38in.]
Weight	10.4kg[22.93lbs]
Packing information(Carton)	1420mm[55.91in.]x702mm[27.64in.]x70mm[2.76in.]/(1pc/ctn)

*Limited warranty: 5-year limited warranty of materials and workmanship; 10-year limited warranty of 90% power output; 25-year limited warranty of 80% power output. For detail, please contact us.
*Specifications are subject to change without notice at any time.