Classic Conduit Composition Mount | QMCC

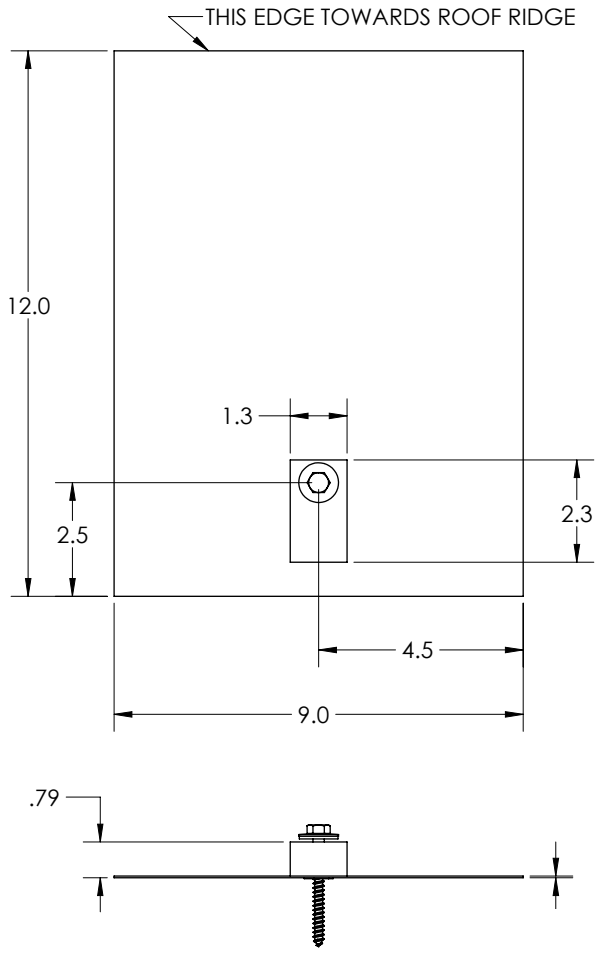

ITEM NO.	DESCRIPTION	QTY.
1	FLASHING, 9" X 12" X .040", 5052, MILL	1
2	QBLOCK, CONDUIT, 5/16", 6061-T6, MILL	1
3	WASHER, SEALING, 1/4" ID X 7/8" OD, EPDM BONDED SS	1
4	LAG SCREW, HEX HEAD, 1/4" x 2-1/2", 18-8SS	1

AVAILABLE IN MILL, CLEAR ANODIZED, AND BRONZE ANODIZED FINISHES.

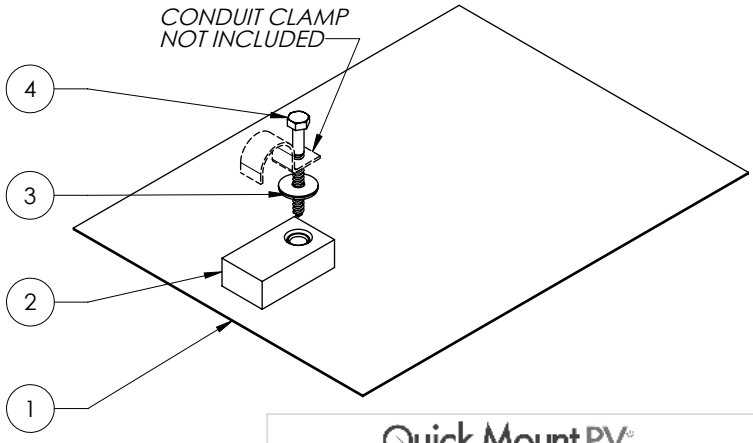

Quick Mount PV

TITLE:

QMCC: CLASSIC CONDUIT COMPOSITION MOUNT

UNLESS OTHERWISE SPECIFIED:	SIZE	DRAWN BY: RAD	REV
DIMENSIONS ARE IN INCHES TOLERANCES: FRACTIONAL ± 1/8 TWO PLACE DECIMAL ±.18 THREE PLACE DECIMAL ±.125	A	DATE: 9/24/2013	4
	SCALE: 1:3	WEIGHT: 0.68	SHEET 1 OF 1

PROPRIETARY AND CONFIDENTIAL
THE INFORMATION CONTAINED IN THIS DRAWING IS THE SOLE PROPERTY OF QUICK MOUNT PV. ANY REPRODUCTION IN PART OR AS A WHOLE WITHOUT THE WRITTEN PERMISSION OF QUICK MOUNT PV IS PROHIBITED.

DO NOT SCALE DRAWING

5 4 3 2 1

Lag pull-out (withdrawal) capacities (lbs) in typical lumber:			
	Lag Bolt Specifications		
	Specific Gravity	1/4" shaft per 1 3/4" thread depth	1/4" shaft per 1" thread depth
Douglas Fir, Larch	.50	393	225
Douglas Fir, South	.46	353	202
Engelmann Spruce, Lodgepole Pine (MSR 1650 f & higher)	.46	353	202
Hem, Fir	.43	313	179
Hem, Fir (North)	.46	353	202
Southern Pine	.55	455	260
Spruce, Pine, Fir	.42	302	173
Spruce, Pine, Fir (E of 2 million psi and higher grades of MSR and MEL)	.50	393	225

Sources: American Wood Council, NDS 2005, Table 11.2 A, 11.3.2 A

Notes:

1) Thread must be embedded in a rafter or other structural roof member.
2) See IBC for required edge distances.

IMPORTANT: To maintain waterproofing it is important that the aluminum flashing (item 1) is properly placed under one full course above the mounting block with at least some of the flashing extending up under the course above that as well. See instructions on back.

Quick Mount PV®

RESPECT THE ROOF

Classic Conduit Mounting Instructions

Installation Tools Required: tape measure, roofing bar, chalk line, stud finder, caulking gun, 1 tube of appropriate sealant, drill with 1/8" bit, drill or impact gun with 7/16" deep socket.

WARNING: Quick Mount PV products are NOT designed for and should NOT be used to anchor fall protection equipment.

Choose placement of conduit mounts along path of conduit. Select location over center of rafter.

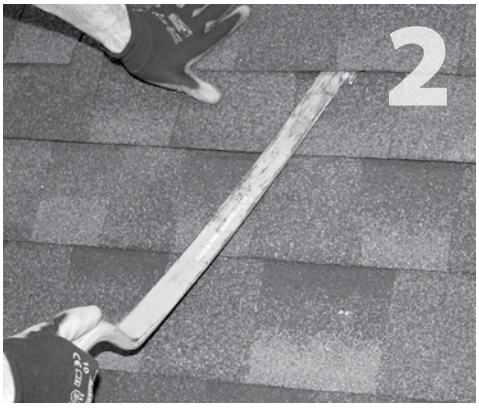

Lift composition roof tile with roofing bar, just above placement of conduit mount.

Slide conduit mount into desired position. Remove any nails that conflict with getting the mount flush with front edge of shingle course. Mark cernter for drilling.

Using drill with 1/8" long bit, drill pilot hole into roof and rafter, taking care to drill square to the roof.

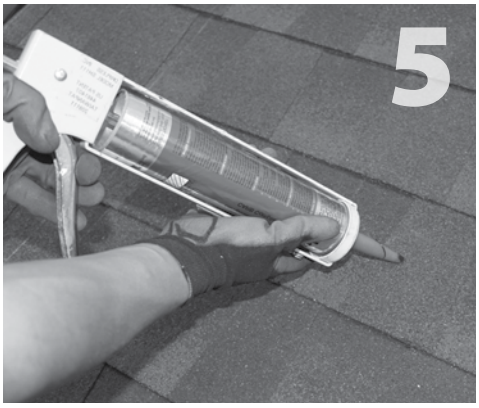

Clean off any sawdust, and fill hole with roof manufacturer's approved sealant.

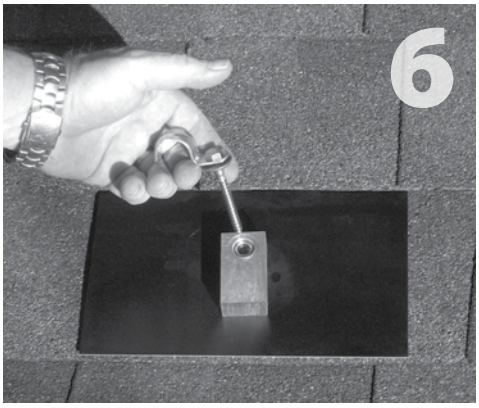

Lift shingle and slide conduit mount into place. Prepare lag bolt with sealing washer and single hole clamp (not included) as shown. Insert lag through hole in block, and position clamp over conduit.

Insert lag through hole in block, and position clamp over conduit. Using drill with 7/16" socket, drive lag until block is tight.

All roofing manufacturers' written instructions must also be followed by anyone modifying a roof system. Please consult the roof manufacturer's specs and instructions prior to touching the roof.

Quick Mount PV®

925-478-8269 • www.quickmountpv.com • info@quickmountpv.com
2700 Mitchell Dr., Bldg 2 • Walnut Creek, CA 94598

©2013 by Quick Mount PV. All rights reserved.